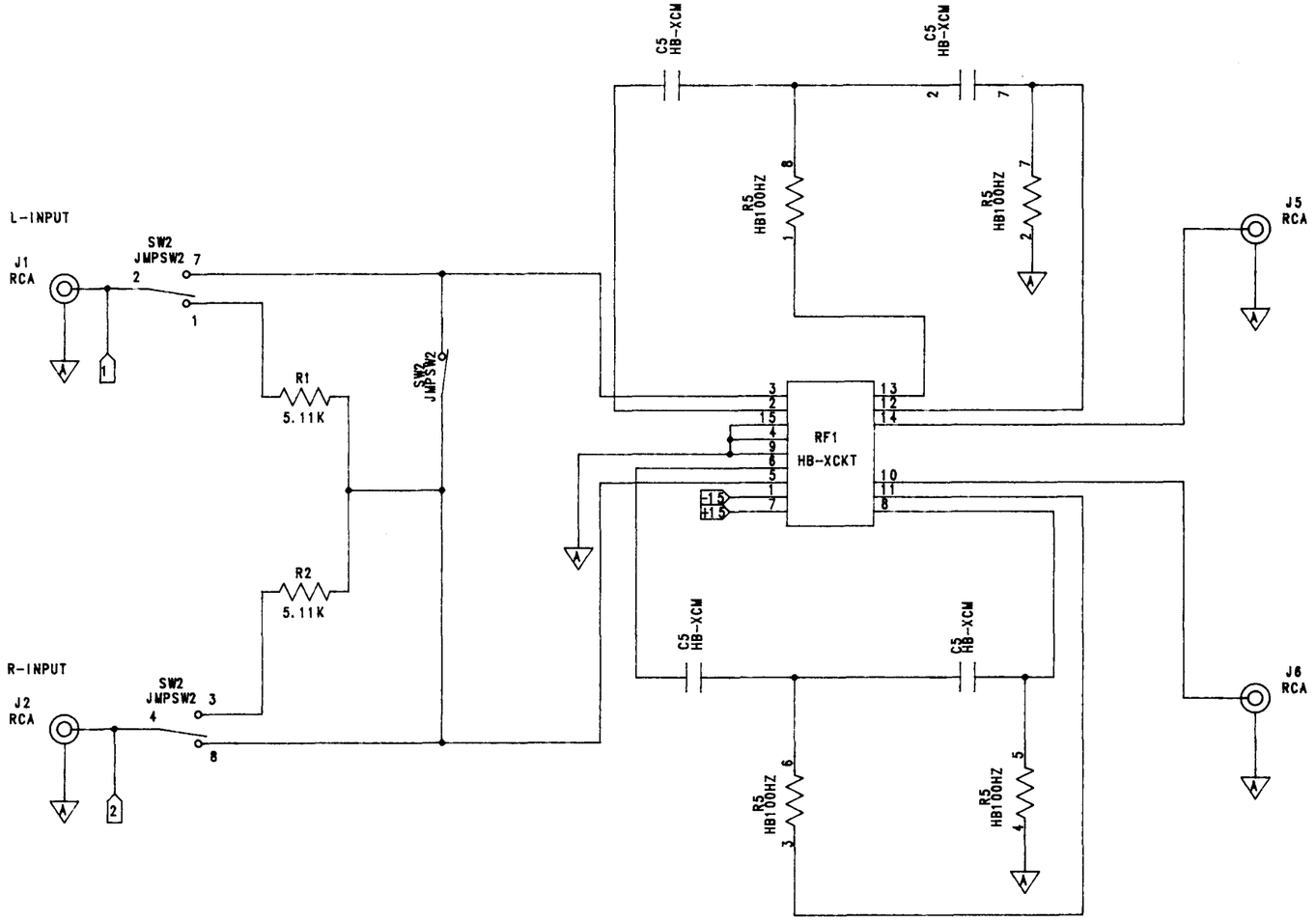

Z	SYM	DA	REVISION RECORD	AUTHIORITY	DRAW	CHECK
			RELEASED		D. SERNA	

NO.	LV		DESCRIPTION & REF DES	PART NO.	QTY.	COMMENT
7			JUMPERS	CC-517	1	
6			3x3 PIN-HEAD SW2	CC-521	1	
5			HB-XCKT RF1	HB-XCKT	1	
4			HB-XCM C5	HB-XCM	1	
3			HB-100HZ R4	HB-100HZ	1	
2			5.11K OHM R1, R2	RMP/4-5111	2	
1			RCA J1, J2, J5, J6	HW-735G	4	

Z	SYM	DA	CHANGE	BY	DA

CORRECTIONS

DWN	D. SERNA	10/26/90
CHK		
ENGR		
APVD		
APVD		

ROCKFORD CORPORATION
FOSGATE DIVISION TEMPE AZ

TITLE
AF2 CHANNEL 1

SIZE B | SCALE NONE | SHEET 1 OF 3

MATL/FS	FILE NAME	PART NO.	REV
	AF2	SCH-035	B

REV B
FILE NAME AF2
PART NO. PC-035

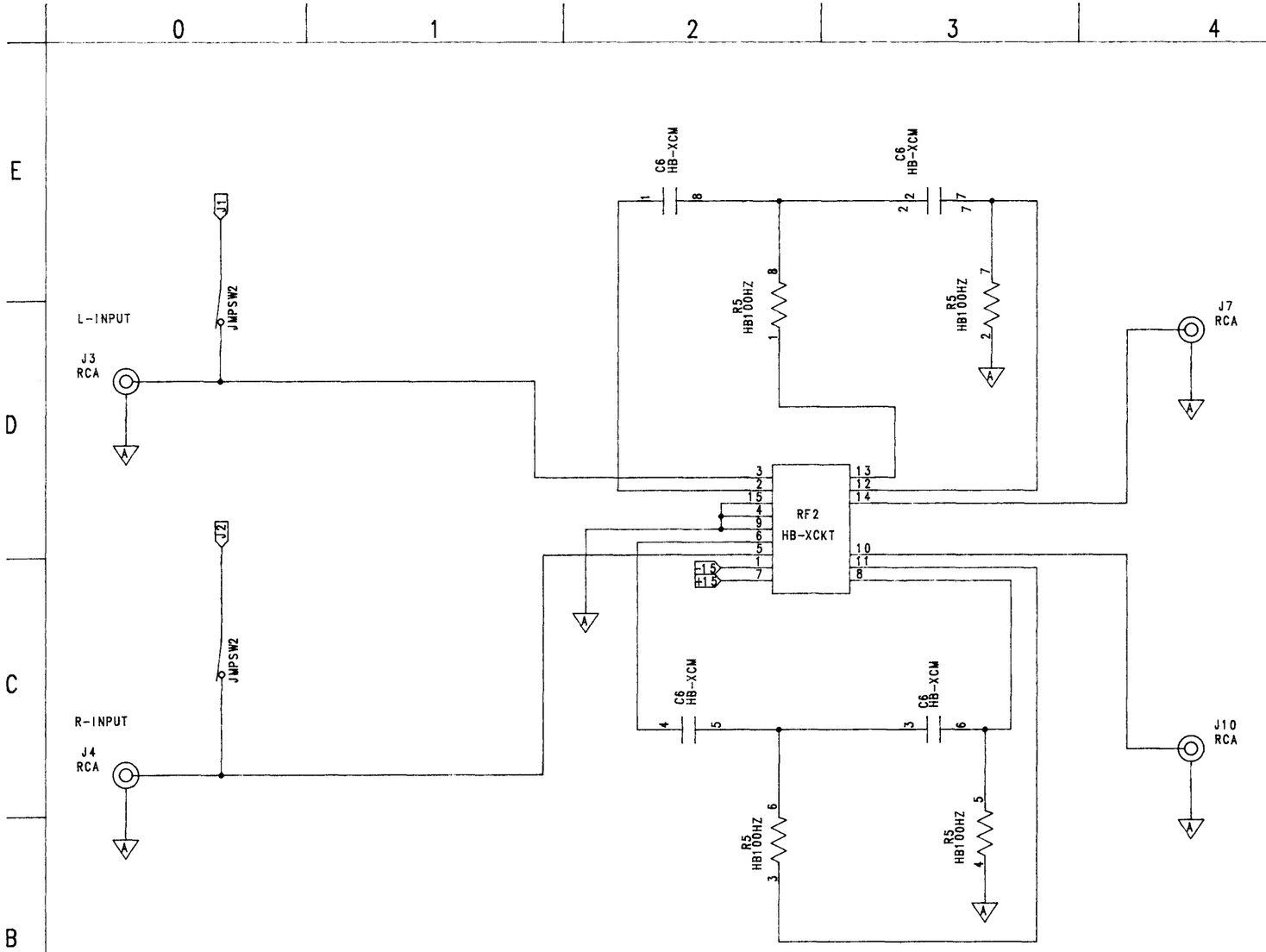

Z	SYM	DA	REVISION RECORD	AUTHORITY	DRAW	CHECK
			RELEASED			

NO.	LV		DESCRIPTION & REF DES	PART NO.	QTY.	COMMENT
			JUMPERS	CC-517	1	
5			3x3 PIN-HEAD SW2	CC-521	1	
4			HB-XCKT RF2	HB-XCKT	1	
3			HB-100HZ R5	HB-100HZ	1	
2			HB-XCM C6	HB-XCM	1	
1			RCA J3, J4 J7, J8	HW-735G	4	

Z	SYM	DA	CHANGE	BY	DA

CORRECTIONS

DWN	D. SERNA	10/26/90
CHK		
ENGR		
APVD		
APVD		
MATL/FS		

ROCKFORD CORPORATION
FOSGATE DIVISION TEMPE AZ

TITLE
AF2 CHANNEL 2

SIZE B | SCALE NONE | SHEET 2 OF 3

FILE NAME	PART NO.	REV
AF2	PC-035	B

REV B
FILE NAME AF2
PART NO. PC-035

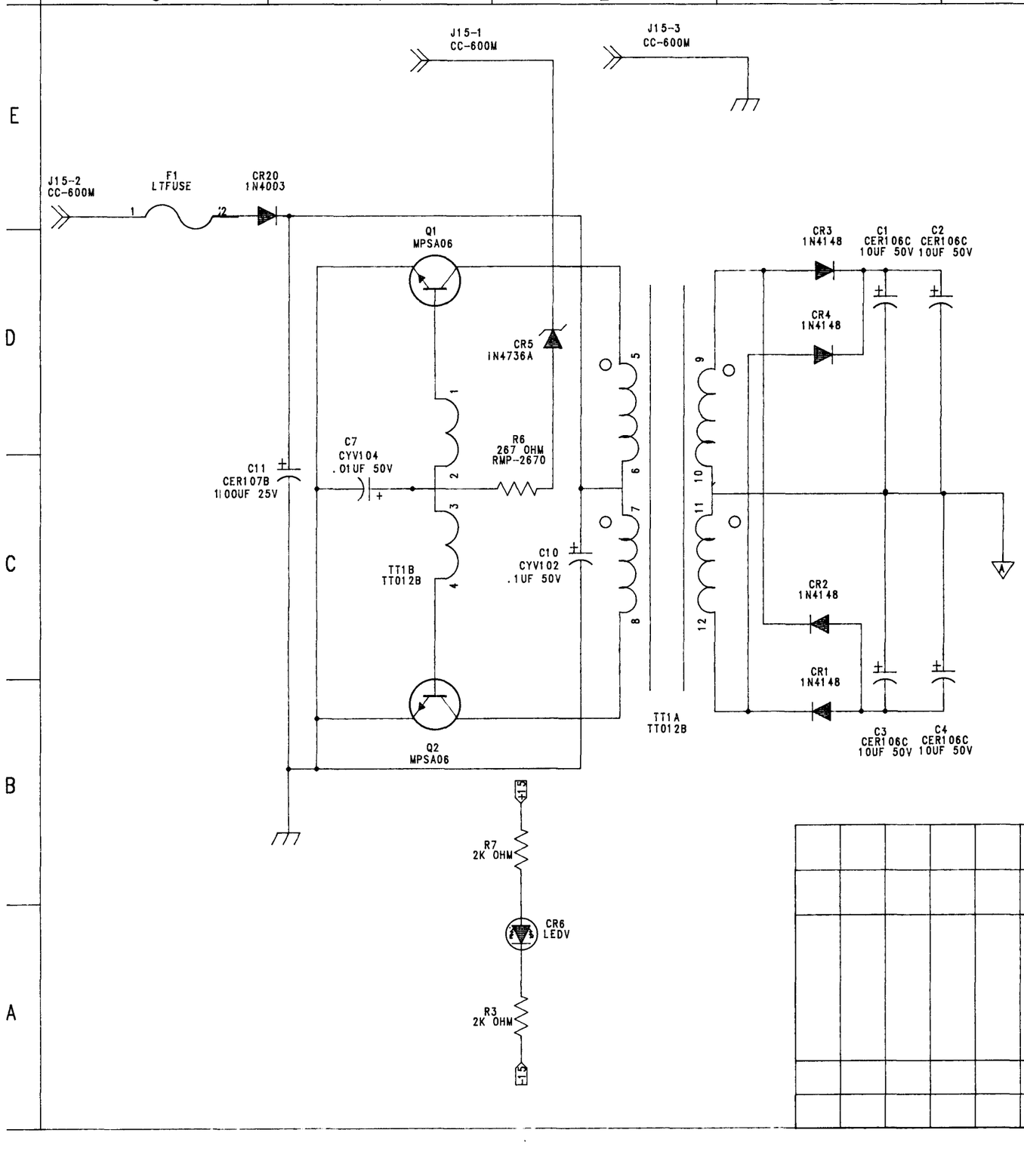

Z	SYM	DA	REVISION RECORD	AUTHORITY	DRAW	CHECK
			RELEASED		D. SERNA	

NO.	LV		DESCRIPTION & REF DES	PART NO.	QTY.	COMMENT
14			LEDV CR6	SS-237	1	
13			2K OHM R3, R7	RMP/4--2001	2	
12			MOLEX CONN. J15-1, J15-2	CC-600M	1	
11			TRANSFORMER TT1	TT-012B	1	
10			LFUSE F1	FS-01/2	1	
9			MPSA06 Q1, Q2	SS-102A	2	
8			1N-4736 CR5	SS-171	1	
7			IN4003 CR7	SS-161	1	
6			IN-4148 CR1, CR2 CR3, CR4	SS-162	4	
5			10UF 50V C1, C2 C8, C9	CER106C	4	
4			.1UF 50V C3, C4, C7	CYV104	3	
3			.001UF 50V C10	CYV102	1	
2			100UF 25V C11	CER107A	1	
1			267 OHM R6	RMP/4-2670	1	

CORRECTIONS	Z	SYM	CHANGE	BY	DA

DWN	D. SERNA	10/20/90
CHK		
ENGR		
APVD		
APVD		

ROCKFORD CORPORATION
FOSGATE DIVISION TEMPE AZ

TITLE
AF2 POWER SUPPLY

SIZE B	SCALE NONE	SHEET 3 OF 3

MATL/FS	FILE NAME	PART NO.	REV
	AF2	PC-035	B

REV B
FILE NAME AF2
PART NO. PC-035